ROAD RUNNER
Start Guide

Tutorial

WEBER WORKSHOPS

1. POD PREP

Prepare the brew pod using the stainless filter (additional paper filter optional). Use the Gizmo to carefully push the brew pod to bottom of the glass.

Do not prewet paper.

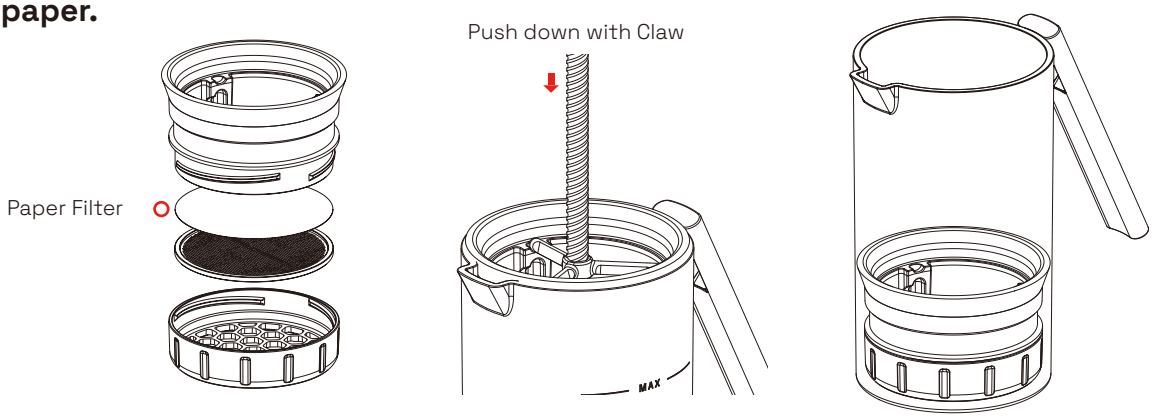

2. GRIND & DOSE

Grind 20-35g fresh coffee and dose into brewer, adding preheated brewing water on top.

Grind size may vary depending on recipe. We suggest starting around moka-pot fineness (a bit finer than filter).

Water volumes from 250-400mL. We suggest 300 mL as a starting point.

Brew temp 80 °C - 100 °C depending on recipe. We suggest 87 °C as a starting point.

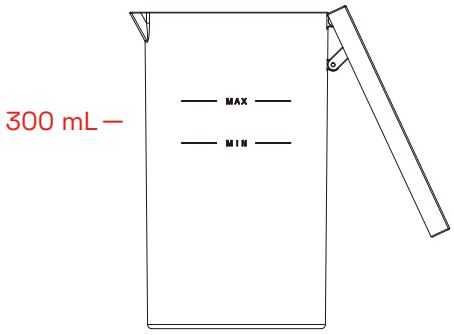

3. AGITATE & WAIT

Use the Gizmo to agitate the coffee and water evenly. Let steep for the desired amount of time.

Steep 1-10min for heated brews. We suggest 5min as a starting point.

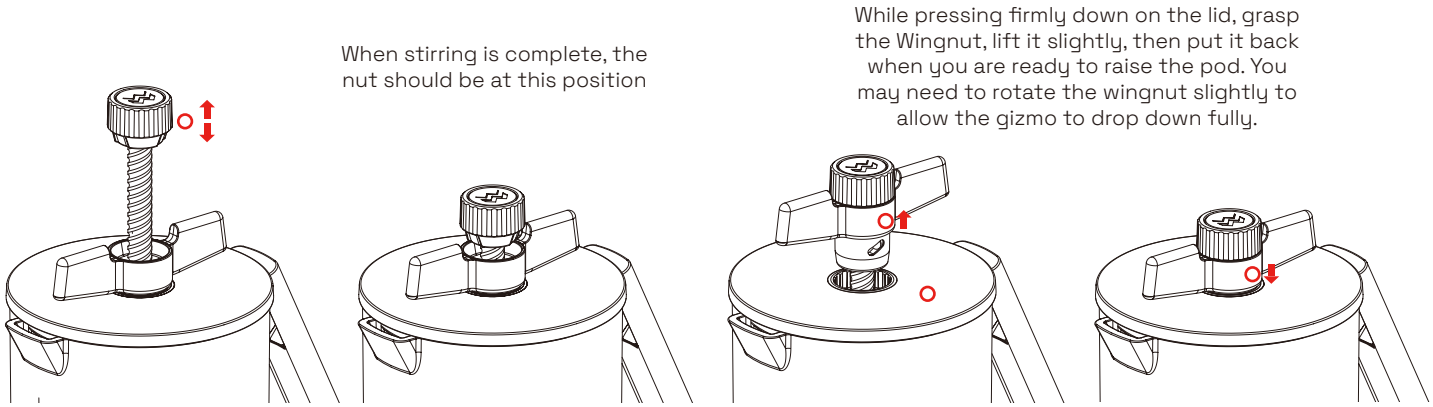

Ready for step 4.

4. VACUUM FILTER

After brew time is up, rotate the Wingnut, which raises the Drive Shaft and pulls up the Pod. This creates a vacuum beneath the Pod, separating the grounds from the coffee, leaving you with a perfectly filtered cup.

Slow pull finishing with a dry puck is always good. This may take 60 seconds or more of slow, evenly paced twisting of the wing nut.

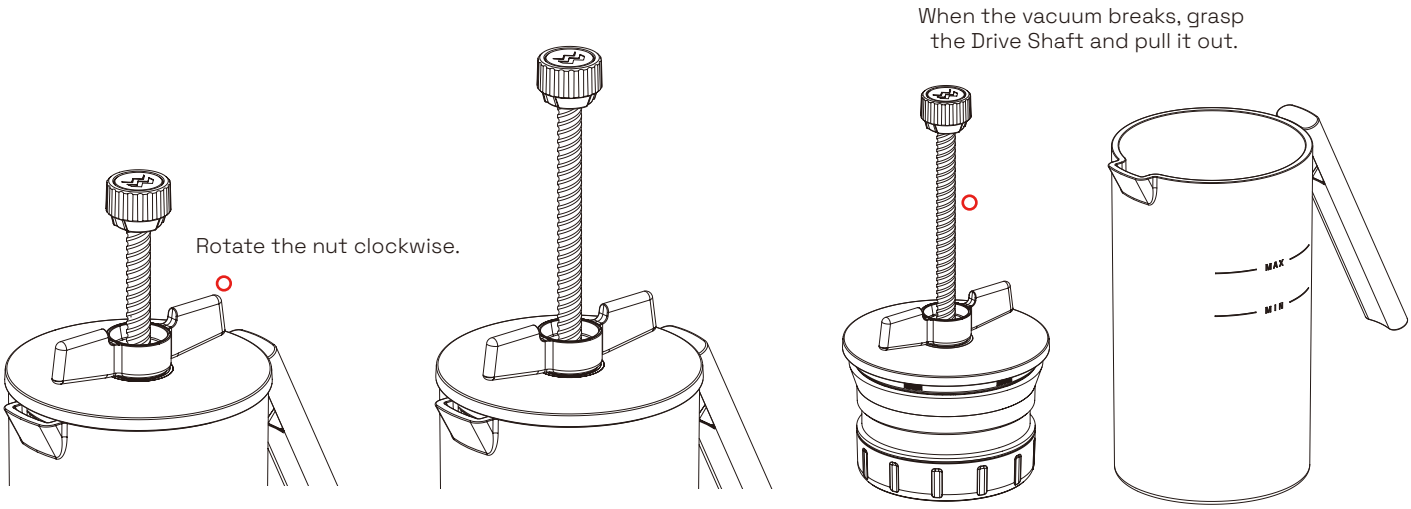

5. CLEANUP

Set the pod aside (it may drip slightly), and enjoy your coffee. After the brew pod has finished cooling, remove the pod cap and compost your puck. Rinse all parts with warm soapy water to clean.

Don't place the BIRD or any of its parts in the dishwasher.

Hold the lid and rotate the brew pod clockwise to separate the parts

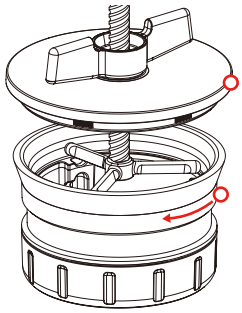

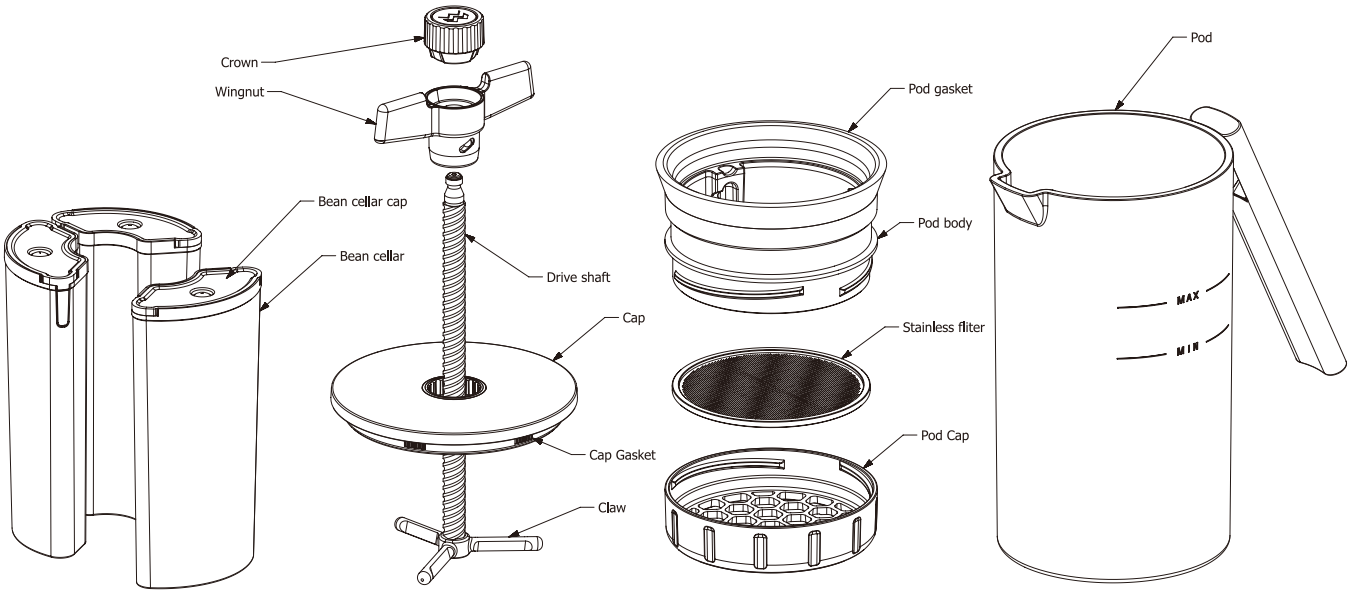

Copyright 2026 Weber Workshops®